International Journal of Contemporary Research in Computer Science and Technology (IJCRCST) ISSN: 2395-5325
Volume 4, Special Issue 1 (September '2018)
Special Issue on 2nd National Conference on Advanced Computing and Communication Technologies,
Conference held at Siri PSG Arts and Science College for Women, Sankari,Tamilnadu,India.

OVERVIEW OF 1'ST GENERATION TO 5'TH GENERATION TECHNOLOGY

R. Bhuvaneswari,
Research Scholar,
Department of Computer Science,
Vivekanandha College for Women,
Tiruchengode,Tamilnadu,India.

S.Jayabharathi,
Assistant Professor,
Department of Computer Science,
Vivekanandha College for Women,
Tiruchengode,Tamilnadu,India.

Abstract : The wireless technology are invented such as 1G, 2G, 3G and 4G but 5G technology provide the fastest connectivity. 5th generation network provide reasonable broadband wireless connectivity with very high speed. 5G technology is to make use of cell phones within very high bandwidth in wireless technology. The next and newest mobile wireless standard based on the IEEE 802.11ac standard of broadband technology for 5G. The 5G technology is all include advanced mobile phone features in 5G mobile technology the most important features in 5G.

Keywords:1G, 2G, 3G, 4G, 5G, GSM, WWW.

I. INTRODUCTION

Mobile Wireless Communication networks have experienced a tremendous change. The cellular wireless Generation(G) generally refers to a change in the nature of the system, speed, technology and frequency. Each generation have some standards, capacities, techniques and new features which differentiate it from the previous one. The first handheld mobile cell phone was demonstrated by Motorola in1973.The 1st commercial automated cellular network was launched by NTT in Japan in 1979, followed by the launch of Nordic Mobile Telephone(NMT) system in Denmark, Finland, Norway and Sweden, in 1981.After this begins the development in generations for mobile wireless communication. The first generation(1G) mobile wireless communication network was analog used for voice calls only. The second generation(2G) is a digital technology and supports text messaging. After this was 3G which provided multimedia support along with higher data transmission rates and increased capacity. The fourth generation(4G) integrates 3G with fixed internet to support wireless mobile internet increases the bandwidth. The 5G brings forward a real wireless world-Wireless World Wide Web (WWWW) while 6G is propossaed to integrate 5G with satellite networks for global coverage.

A. First Generation, 1G

1G mobile phone launched by 1980-90. 1G mobile phone supported by Analog system in 1st generation. Cell phone speed 2.4kbps data rate in bandwidth 150/900MHz. The frequency in Analog signal 30KHz. System allows users in voice call only in first wireless communication.

Its basic features are:

- ✓ Speed-2.4 kbps
- ✓ Allows voice calls in 1 country
- ✓ Use analog signal.
- ✓ Poor voice quality
- ✓ Poor battery life
- ✓ Large phone sizes
- ✓ Limited capacity
- ✓ Poor handoff reliability
- ✓ Poor security
- ✓ Offered very low level of spectrum efficiency

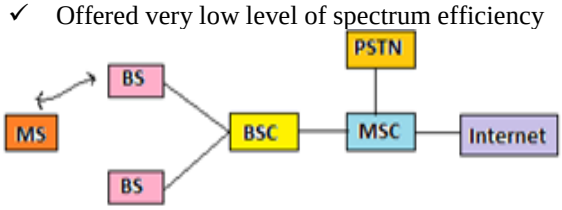

Figure 1:Architecture of AMBS

B. Second Generation (2G)

2G mobile phone launched 1990-2000. 2G mobile phone in provide the service text message and picture message MMS. The bandwidth 900MHz frequency 1.8GHz data speed in 64Kbps. The technology in digital cellular and GSM

The main features of 2G:

- ✓ Data speed was up to 64kbps
- ✓ Use digital signals
- ✓ Enables services such as text messages, picture messages and MMS(Multimedia message)
- ✓ Provides better quality and capacity
- ✓ Unable to handle complex data such as videos.

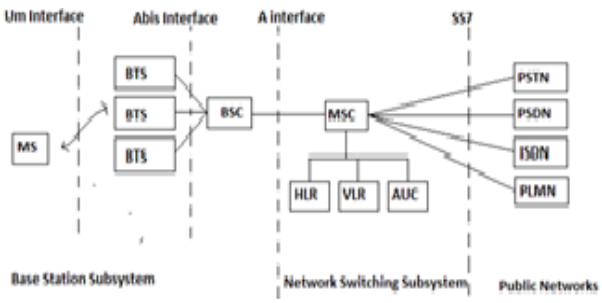

Figure2:GSM system Architectures

C. Third Generation (3G)

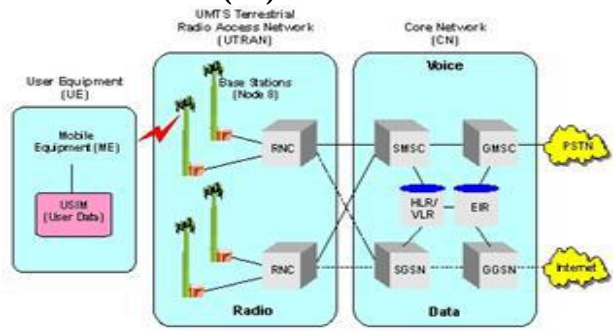

Figure 3

3G mobile phone launched 2000-2010. 3G mobile system bandwidth 100MHz transmissions speed from the data rate 144Kbps/2Mbps. Frequency in 3G mobile 1.8GHz voice call are the global roaming. Fast communication voice call and internet, conferencing, video call, gaming in used for 3G phone. Technology used for digital cellular and CDMA, UMTS, EDGE and GPRS system

The main features of 3G are:

- ✓ Speed 2 Mbps
- ✓ Typically called smart phones
- ✓ Increased bandwidth and data transfer rates to accommodate web-based pplications and audio and video files.
- ✓ Provides faster communication
- ✓ Send/receive large email messages
- ✓ High speed web/more security/video conferencing/3D gaming
- ✓ Large capacities and broadband capabilities

D. Fourth Generation (4G)

3G technology fast data rates transfer. 4G mobile phone launched 2010-2020. The bandwidth high speed 100MHz. the frequency 2.8GHz in data back100Mbps-1GB. Technology used for GAM, GPRS, WIFI, Bluetooth at high speed technology system in 4G mobile.

The main features of 4G are :

- ✓ Capable of provide 10Mbps-1Gbps speed
- ✓ High quality streaming video
- ✓ Combination of Wi-Fi and Wi-Max
- ✓ High security
- ✓ Provide any kind of service at any time as per user requirements anywhere
- ✓ Expanded multimedia services
- ✓ Low cost per-bit
- ✓ Battery uses is more

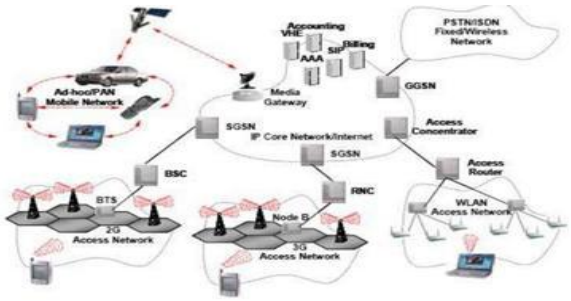

Figure 4: 4g network Architecture

E. Fifth Generation (5G)

5G mobile phone launched 2020-2030. 5G mobile used for high speed bandwidth 1000xBW pr unit area the frequency used for 3-300GHz. Data back for high speed 1Gbps and etc.. Technology used for WWWW technology cell phone with internet access. 5G technologies including camera, recording, video call, audio player and then more etc.

The main features of 5G are :

- ✓ Very low battery power consumption.
- ✓ Worldwide wireless web (WWWW).
- ✓ Cheaper traffic fees due to low infra-structure deployment costs.
- ✓ Better coverage at cell end.
- ✓ Multiple data transfer paths.
- ✓ Every mobile in a 5G technology will have an IP (IPV6) address (IPV6) according to the location and network being used.

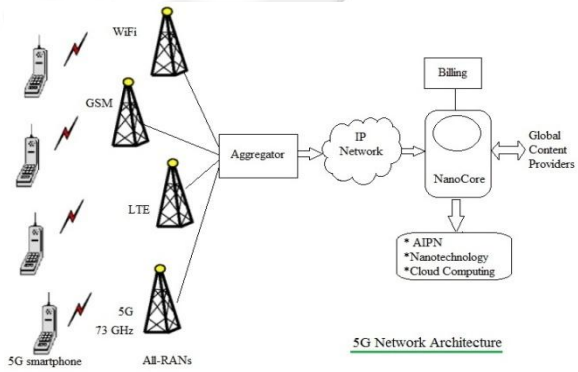

Figure 5:5g Architecture

II. WHAT IS 5G?

5G Technology stands for 5th Generation Mobile technology. 5G technology has extraordinary data capabilities and has ability to tie together unrestricted call volumes and infinite data broadcast within latest mobile operating system. 5G technology has a bright future because it can handle best technologies and offer priceless handset to their customers. May be in coming days 5G technology takes over the world market. 5G Technologies have an

extraordinary capability to support Software and Consultancy. The Router and switch technology used in 5G network providing high connectivity. The 5G technology distributes internet access to nodes within the building and can be deployed with union of wired or wireless network connections.

III. COMPARISON OF ALL GENERATIONS OF MOBILE TECHNOLOGIES

Table.2 comparison of mobile generations 1g to 5g

Technology / Features	*1G*	*2/2.5G*	*3G*	*4G*	*5G*
Start/ Deployment	1970/ 1984	1980/ 1999	1990/ 2002	2000/ 2010	2010/ 2015
Data Bandwidth	2 kbps	14.4-64 kbps	2 Mbps	200 Mbps to 1 Gbps for low mobility	1 Gbps and higher
Standards	AMPS	2G: TDMA, CDMA, GSM 2.5G: GPRS, EDGE,1xRTT	WCDMA, CDMA-2000	Single unified standard	Single unified standard
Technology	Analog cellular technology	Digital cellular technology	Broad bandwidth CDMA, IP technology	Unified IP and seamless combination of broadband, LAN/WAN/	Unified IP and seamless combination of broadband,

IV. CONCLUSION

The 5G technology is very high speed in wireless technology. 5G will offer even more flat architecture by using advanced semiconductor technologies as 22mN CMOS. 5G will promote concept of super core, where all the network operators will be connected one single core and have one single infrastructure, regard less of their technologies.

V.REFERENCES

[1]. Ms. Anju Uttam Gawas, An Overview on Evolution of Mobile Wireless Communication Networks: 1G-6G, JRITCC, VOLUME 3 ISSUE 5, MAY2015

[2]. Meenal G. Kachhavay et al, International Journal of Computer Science and Mobile Computing, Vol.3 Issue.
3, March- 2014 [3] Ms. Reshma S ,5G Mobile Technology JARCET,Volume 2, Issue 2, February 2013
http://www.scribd.com/doc/22050811/5g-Wireless-Architecture-v-1.

[3]. Akhilesh Kumar Pachauri 1 and Ompal Singh ,"5G Technology – Redefining wireless Communication in upcoming years" , International Journal of Computer Science and Management Research ,Vol 1 Issue 1,Aug 2012

[4]. Singh, Sapana, Pratap Singh, "Key Concepts and Network Architecture for 5G Mobile Technology.", International Journal of Scientific Research Engineering & Technology,1.5,2012

[5]. Ms. Neha Dumbre, 5G WIRELESS TECHNOLOGIES-Still 4G auction not over, but time to start talking 5G International Journal of Science, Engineering and Technology Research (IJSETR) Volume 2, Issue 2, February 2013